RSB x90
Part Nº: 9062.0x

4-Way RF-Switch

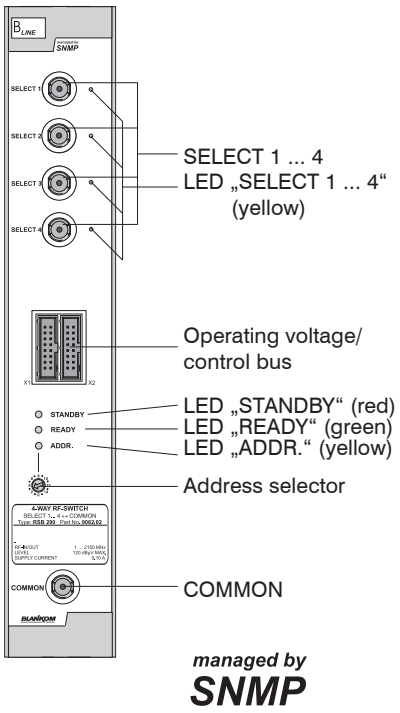

Device variants

RSB 290	9062.02	4-Way RF-Switch
RSB 390	9062.03	4-Way RF-Switch

Minimum software requirements for HCB x00:

9650.03:	version 2.34*
9650.04/.05:	version 3.18*
9652.01:	version 3.23*

*) Updates: www.blankom.de

General

The RF-Switch RSB x90 is a module of the head end systems B-LINE and C-LINE. It realizes signal switchings and redundancy functions. The switch works bidirectionally, i.e. the signal flow can be effected in both ways (SELECT to COMMON or COMMON to SELECT). The integration of the RSB x90 into the head end is done as standard module with defined address. The adjustment of the module can be done directly at the Headend Controller (manual control) or with PC/ laptop (remote control). The RSB x90 can be integrated into the time controlled switching system of the HCB x00. To that the module address, time, function and requested SELECT number are to selected (e.g. 00/01; 20:00, RF signal; 1)
The status of the module is displayed via LED's:

· red -	- permanent	module is in standby
	- flashing	hardware error
· green	- permanent	module ok
· yellow	- permanent	remote access
	- flashing	data transfer

Functional description

The switch has 4 SELECT ports. One of these ports can be selected by software and switched to the COMMON port. The LED of the selected port is permanently on (yellow). Simultaneously the other 3 SELECT ports are terminated intern with an impedance of 75 Ω automatically. Within the module are 3 switches: one switches between SELECT 1 and 2, another between SELECT 3 and 4. The third switches between SELECT 1/2 and SELECT 3/4. Because that there are essentially higher decoupling values between the SELECT ports 1/2 to 3/4 as between the SELECT ports 1 and 2 respectively SELECT 3 and 4. This results because the switches are connected in series in the first case and only one switch can be effective in the second case. If very high decoupling values are required, this difference can be used and e.g. only the ports SELECT 1 and 4 are used.

Note: A Headend Controller HCB 100 „Blue“ (9650.03 or higher version) or HCB 200 is required to control the RF-Switch RSB x90.

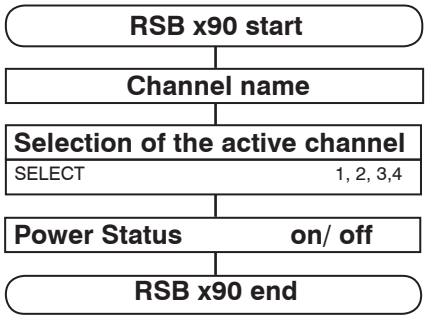

Block diagram-operating status: „SELECT 4“

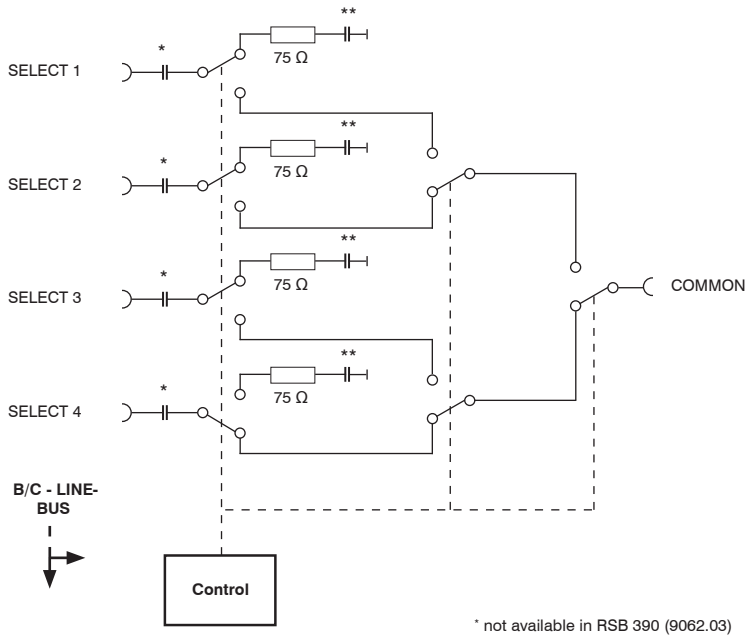

* not available in RSB 390 (9062.03)
** not available in RSB 290 (9062.02)

The manual instructions of the Headend Controller HCB x00 and the Bus Extender BEB x00 have to be considered!

RSB x90
Part N°: 9062.0x

4-Way RF-Switch

B LINE CE

Technical data

RF parameters

Frequency range	9062.02	1 ... 2150 MHz
	9062.03	0 ... 2150 MHz
Connector		F socket
Impedance		75 Ω
Through loss		≤ 1 dB (CATV) ≤ 1,5 dB (SAT IF)
Decoupling		≥ 60 dB (SEL 1/ 2 to SEL 3/ 4) ≥ 40 dB (SEL 1 to SEL 2, respectivly SEL 3 to SEL 4)
Return loss		≥ 15 dB (CATV) ≥ 10 dB (SAT IF)
Level		max. 120 dBμV
Voltage/ current	9062.03 only!	60 V/ 100 mA

Operating parameters

Voltage/ current	12 V (± 0.5 V), 100 mA
Residual ripple of supply voltage	≤ 10 mV_{pp}

Environmental conditions

Temperature range	-10 … +55 °C
Relative humidity	≤ 80 % (non condensing)
Method of mounting	vertical
Location of mounting	splash-proof and drip-proof

Miscellaneous

Dimensions (l x w x h)	
without 19" - adapter	50 x 276 x 148 mm
with 19" - adapter	50 x 301 x 148 mm
Weight	1,100 g

Delivery content

2 x terminating impedance 75 Ω
1 x bus connector 52 mm

Head end bus structure

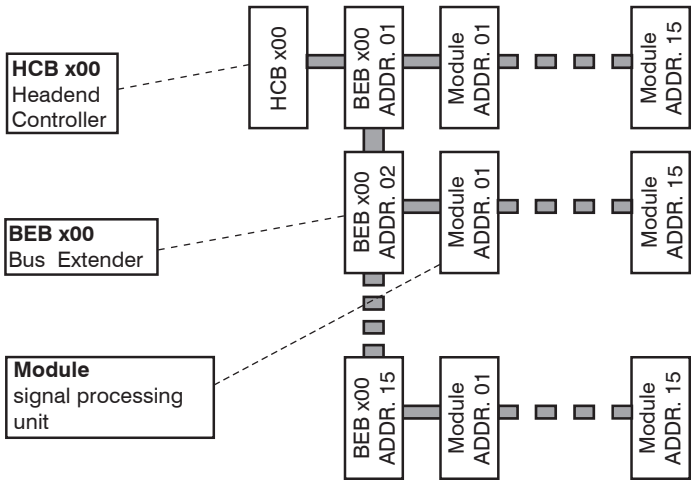

The number of the possible module connections (01 ... 15) to a BEB x00 depends on the total power consumption of this line!

Safety and operating instructions

STOP When assembling, starting-up and adjusting the modules, it is necessary to consider the system specific references in the manual instruction!

⚠ The modules may only be installed and started up by authorized technical personnel!

⚠ When assembling the modules into the receiving points, the adherence of the EMC regulations is to be secured!

⚠ The assembly and wiring have to be done without voltage!

⚠ All active modules may only be operated with the Headend Controller HCB x00 or Bus Extender BEB x00!

⚠ The main voltage and the operating voltage of the modules working by DC have to be in complience to the operating parameters described in the technical data.

⚠ With all work the defaults of the DIN EN 50083 have to be considered! Especially the safetyrelevant execution of the DIN EN 60728-11 is necessary!

Options and other TV standards available upon request! Subjects to changes due to technical progress.

***BLANKOM** Antennentechnik GmbH*
Hermann-Petersilge-Straße 1 • 07422 Bad Blankenburg • Germany • Telefon +49 (0) 3 67 41 / 60-0 • Fax +49 (0) 3 67 41 / 60-100